HELIOMOTION

QUICK ASSEMBLY GUIDE
PV-650

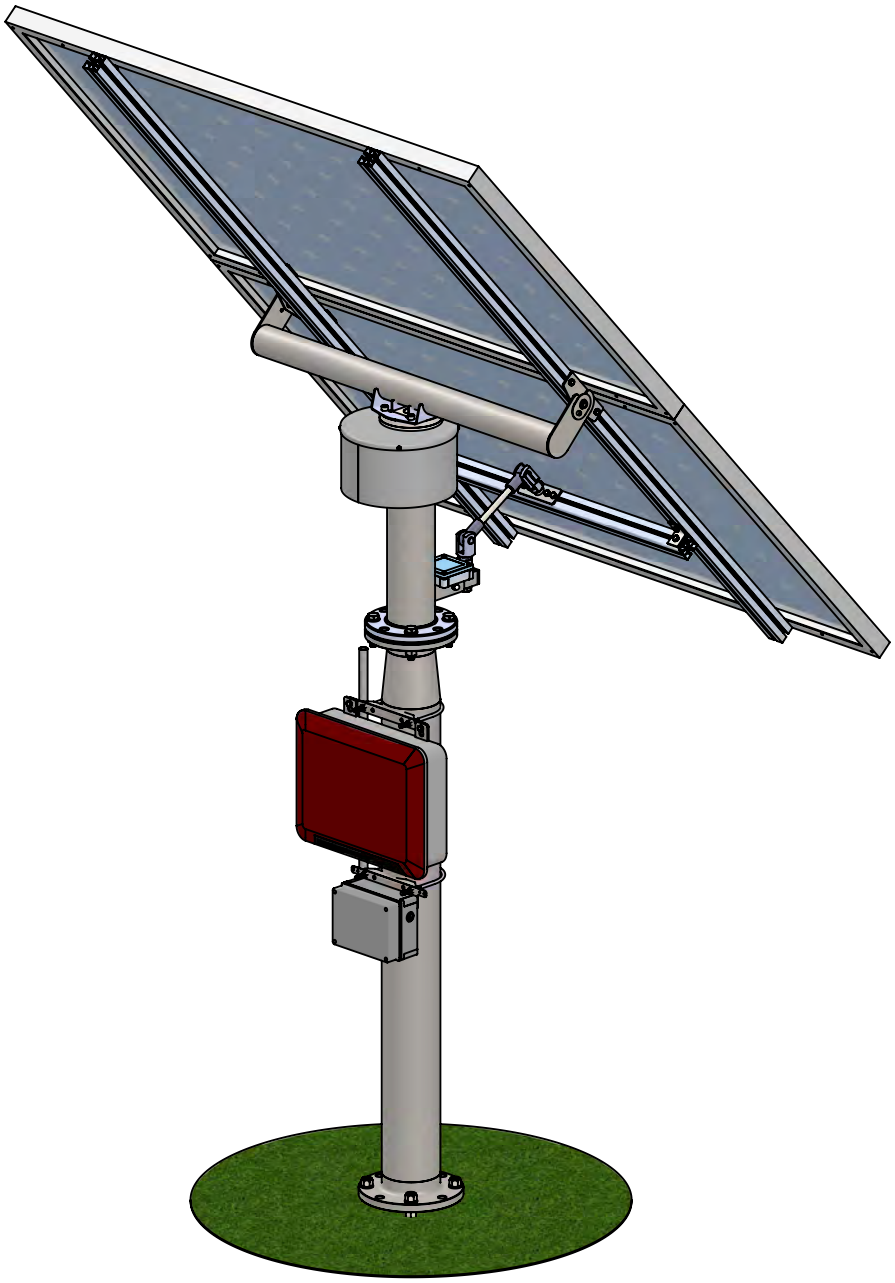

HelioZenit

Revision 3, 2018

PART I - FOUNDATION

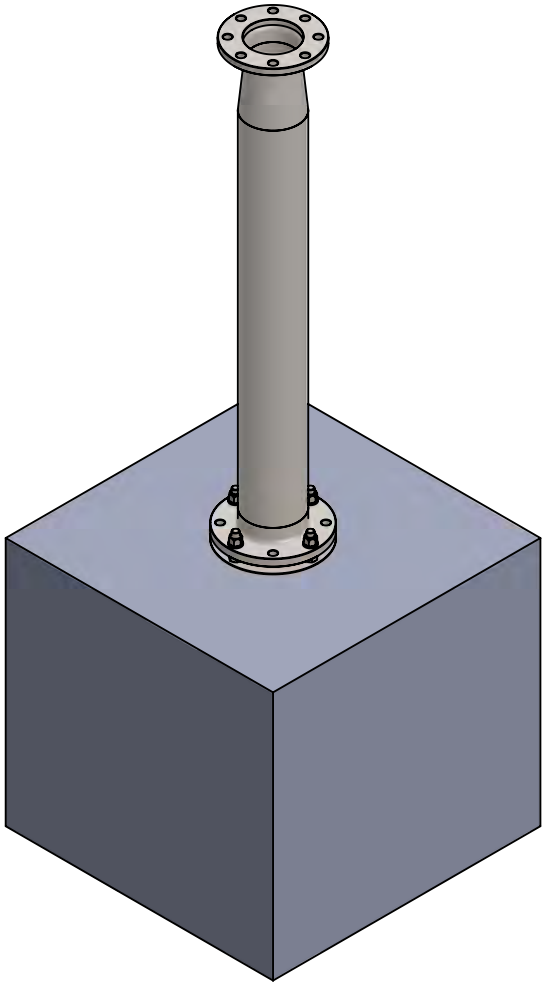

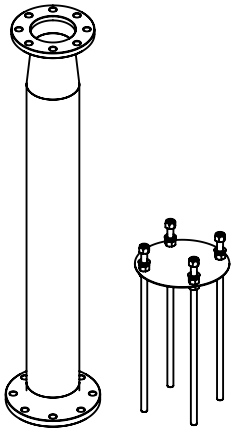

1x 1x

1

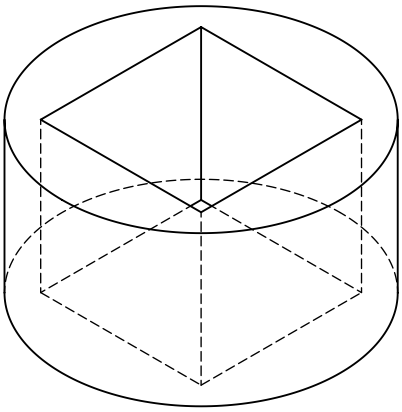

Make a hole for the concrete at your chosen location. The hole for a PV-650 should be 70x70cm, 90cm deep (~400 liter). Refer to the manual for more information.

2

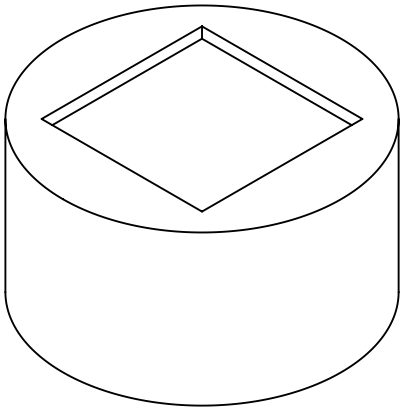

Fill the hole with concrete up to a few centimeters below ground level.

3

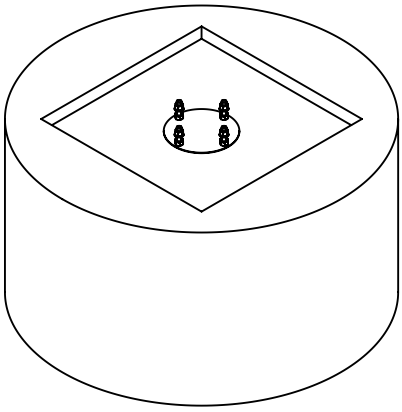

Push the rod unit into center of the concrete and let the flange rest on top of it. Use a spirit level to align the flange horizontally.

Allow the concrete time to harden before assembling the remainder of the power plant. Cover the concrete with soil after it has cured for 4 weeks.

Rod unit

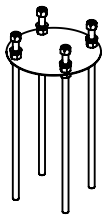

1x

4

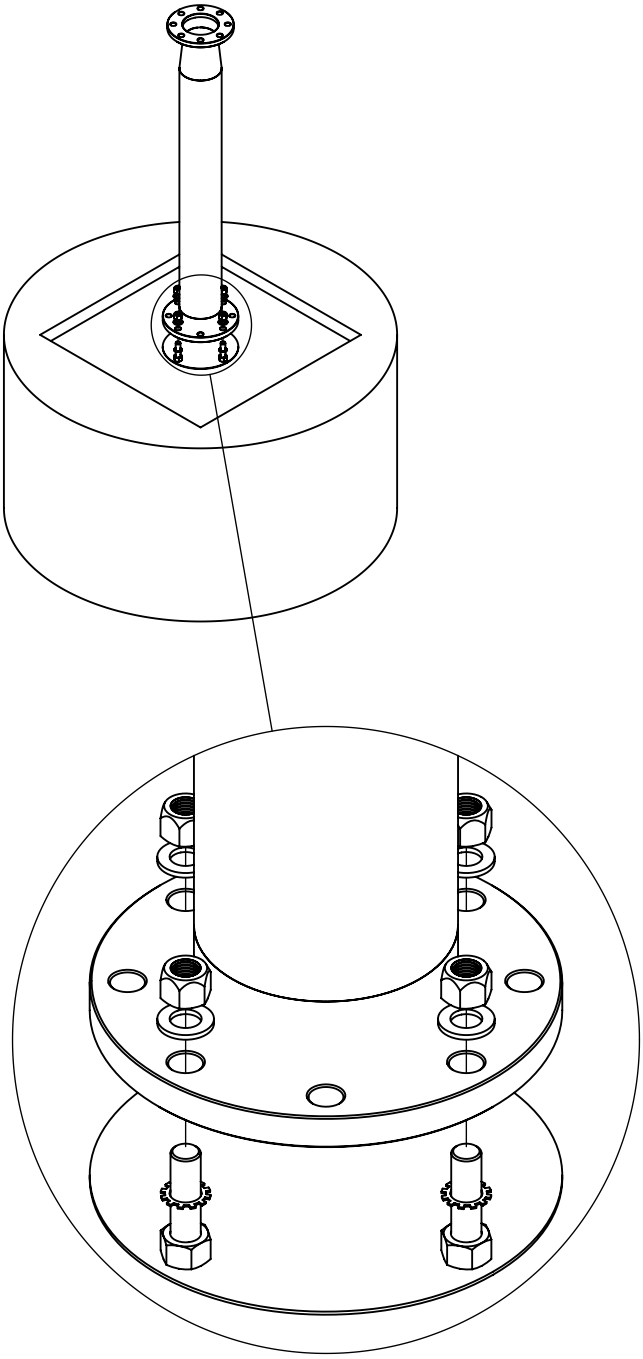

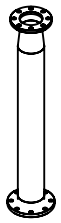

1x

1. Adjust bottom nuts to vertically align the column.

2. Tighten both top and bottom nuts to secure the column.

PART II - TRACKER

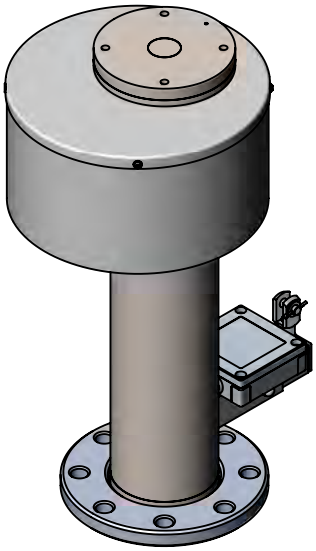

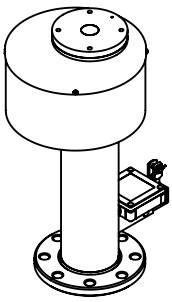

1x

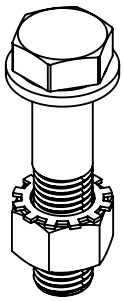

4x

1

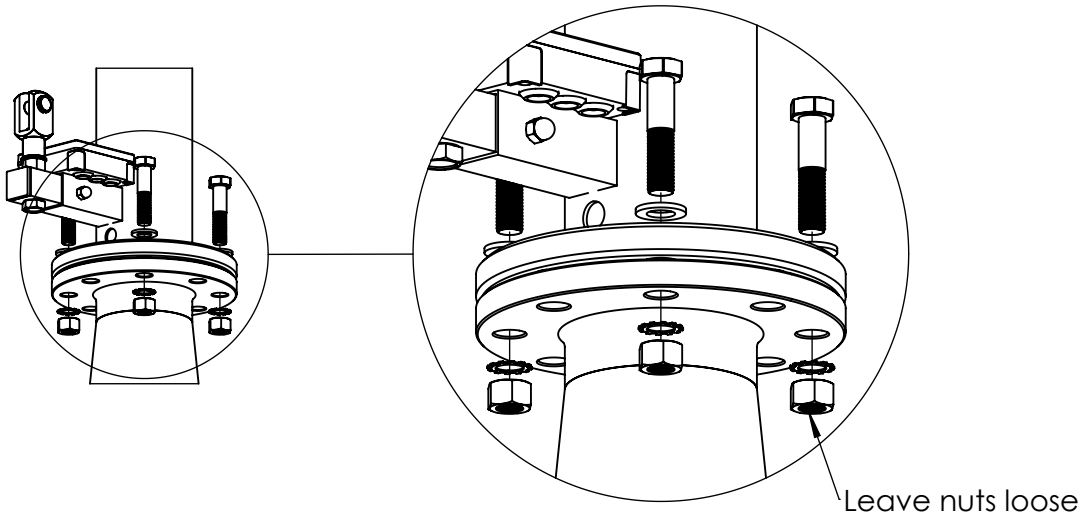


4x


1x

2

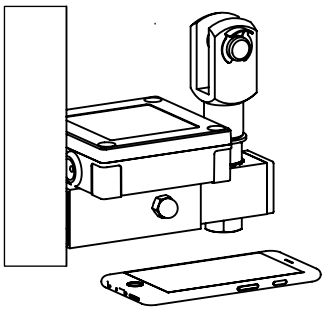

The tracker needs to be turned to face true south in the northern hemisphere or true north in the southern hemisphere. To do so follow these steps.

1. Launch the compass app on your smart phone. This compass is GPS compensated, making it more accurate than a regular compass.

2. Align the phone to true south (or north) according to the compass.

3. Turn the tracker so that the edge of the balk lines up with the edge of the phone. Make sure the compass is not distorted by being too close to any metal objects.

4. Tighten the bolts holding the tracker to the foundation column.

PART III - FRAMEWORK

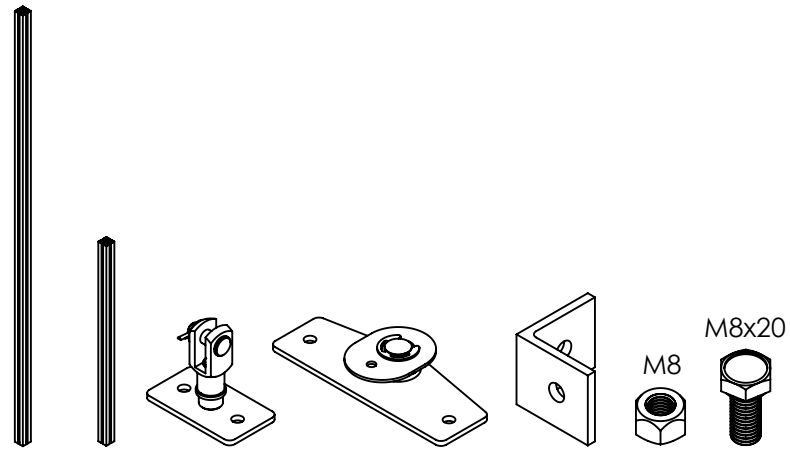

2x 1x 1x 2x 2x 10x 10x

1

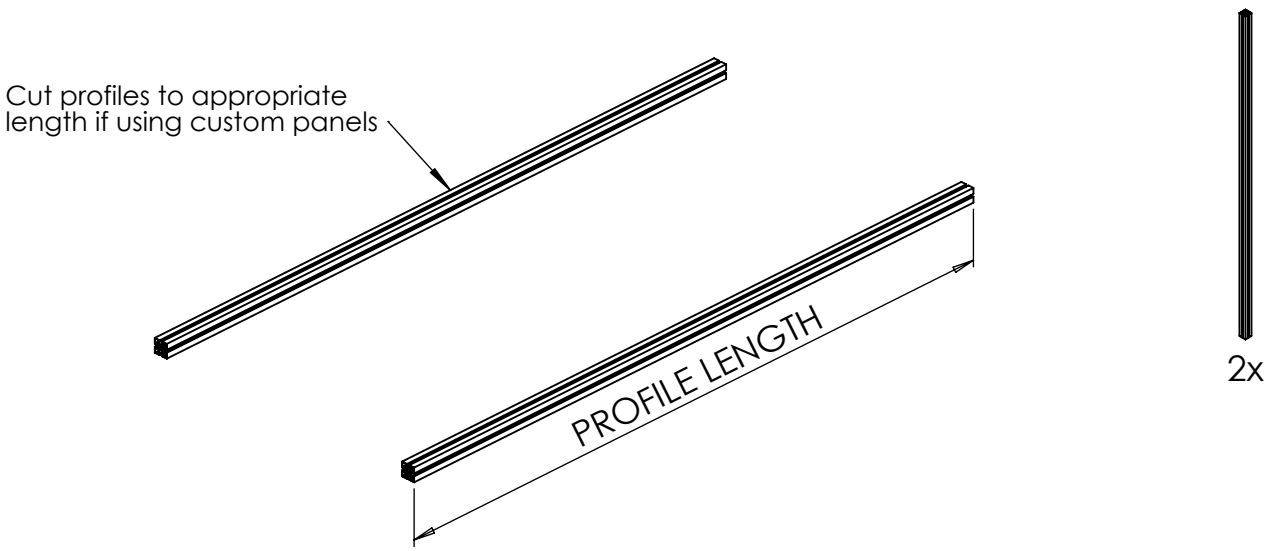

PROFILE LENGTH = SOLAR PANEL WIDTH * 2 = _____ mm

2

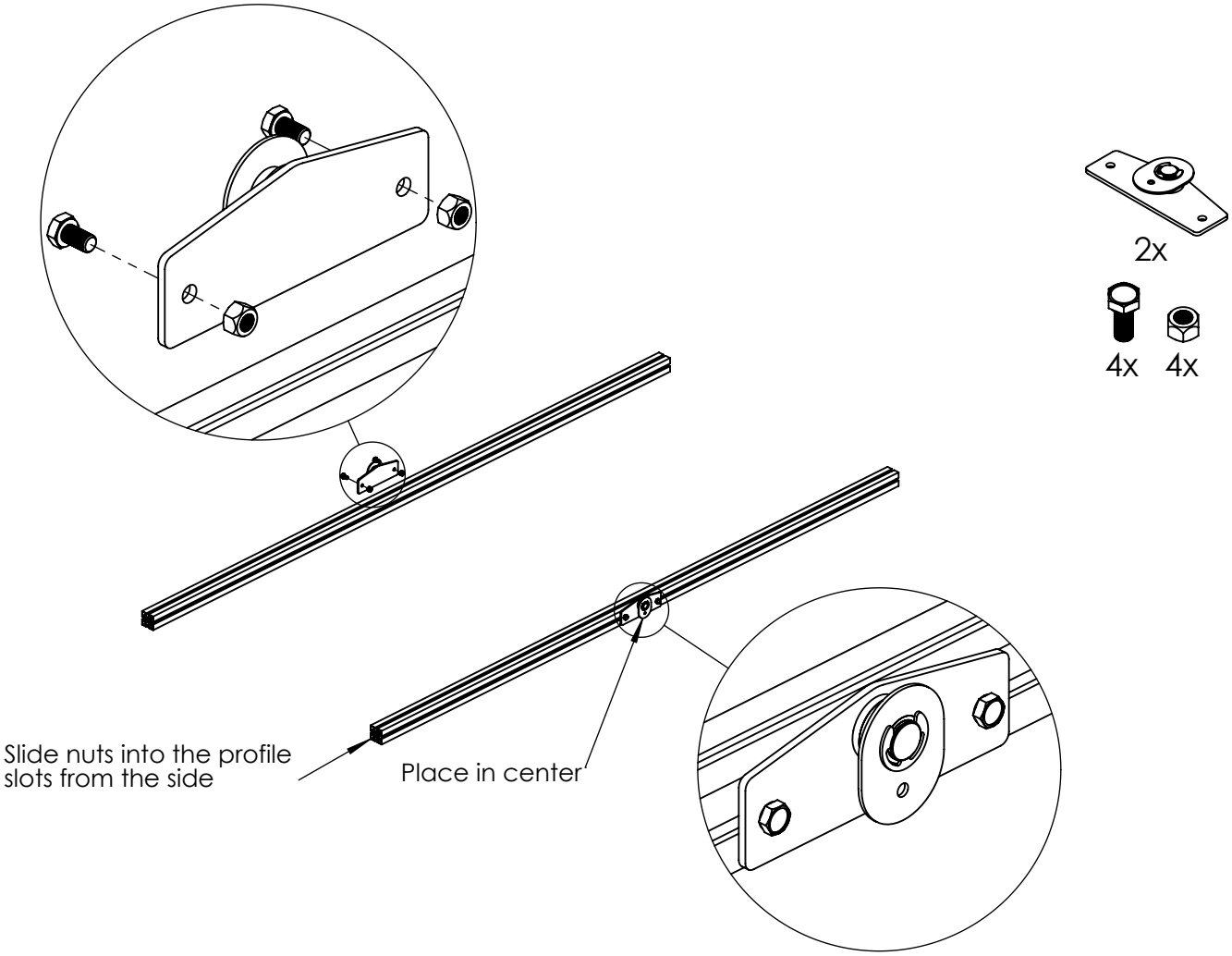

3

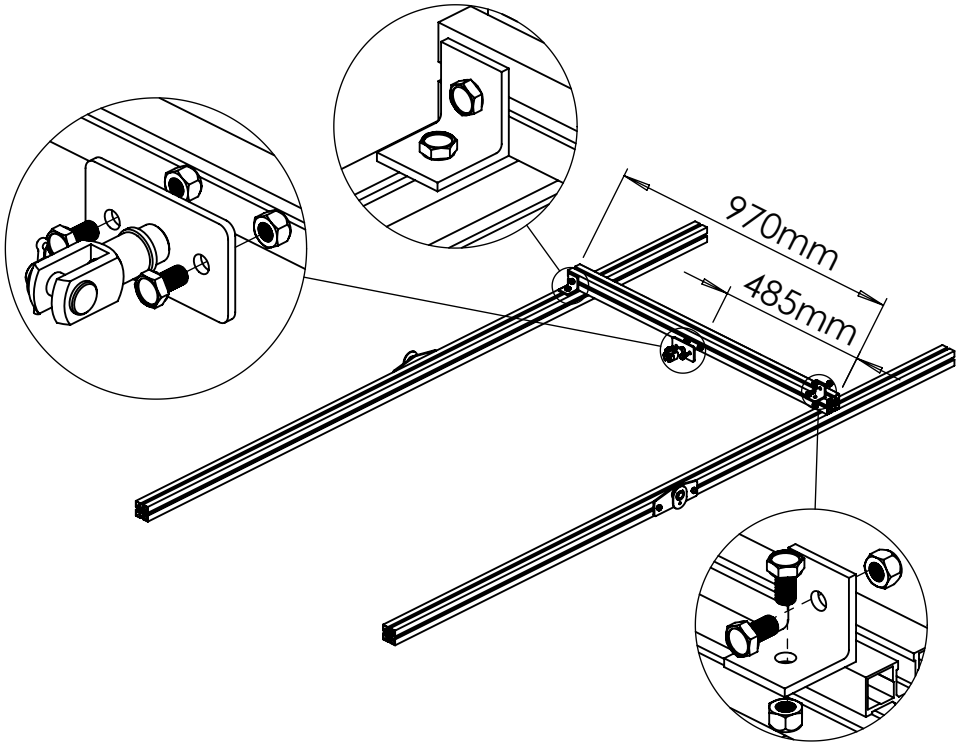

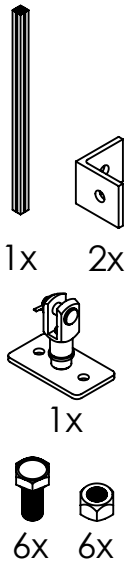

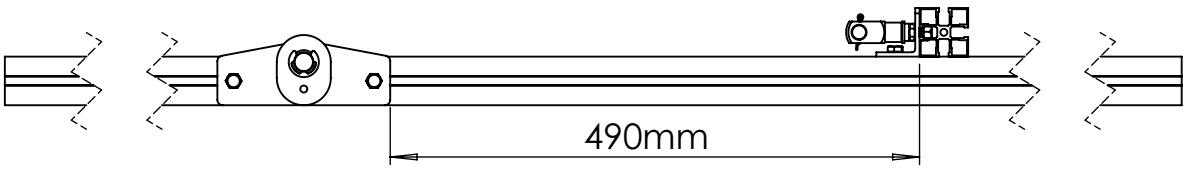

PART IV - FORK

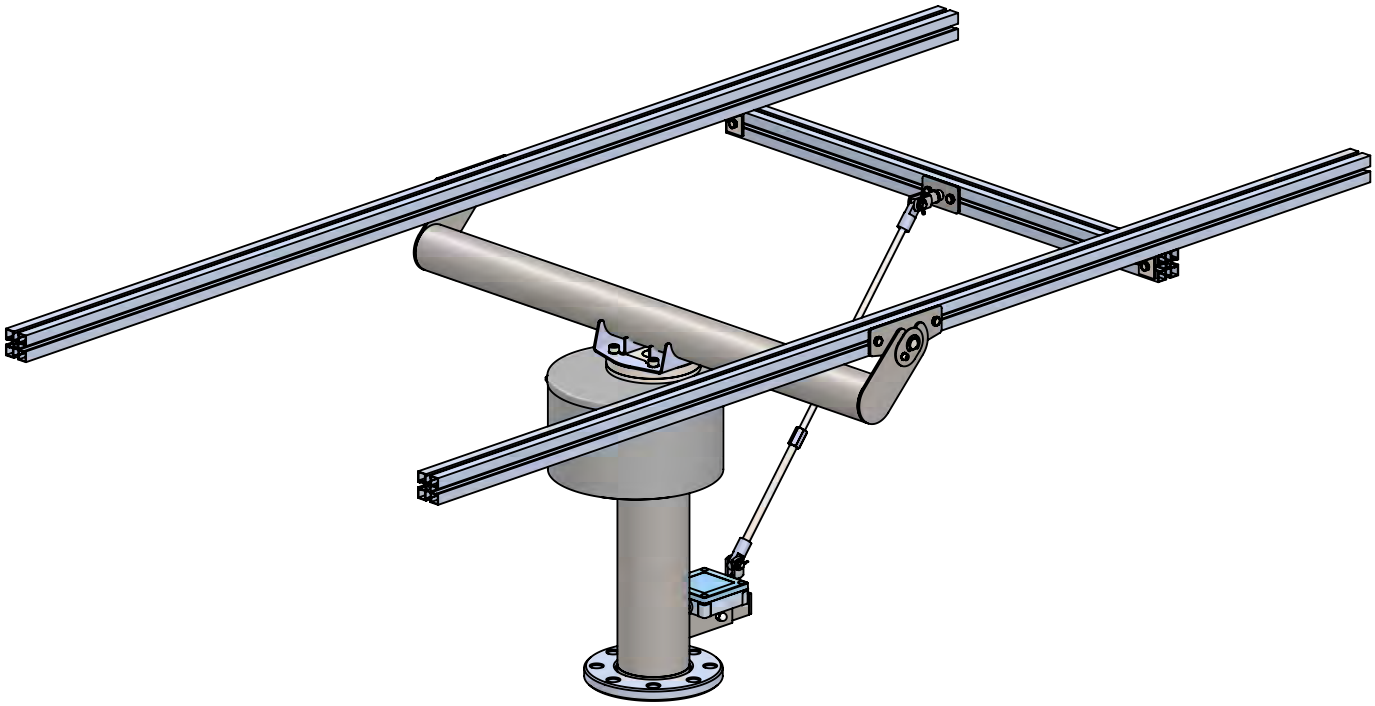

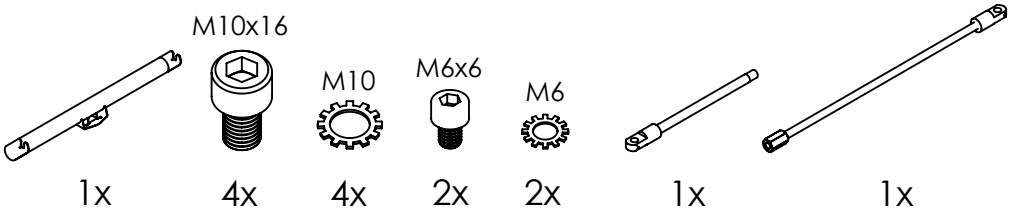

1

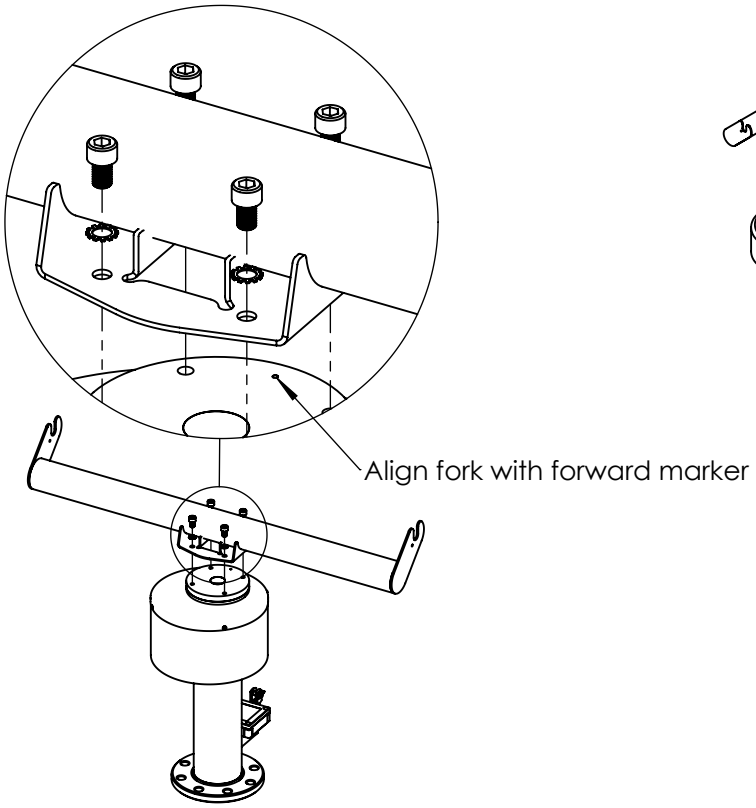

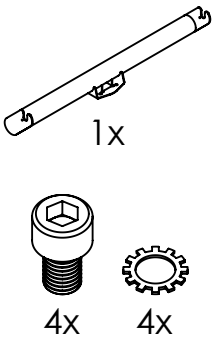

2

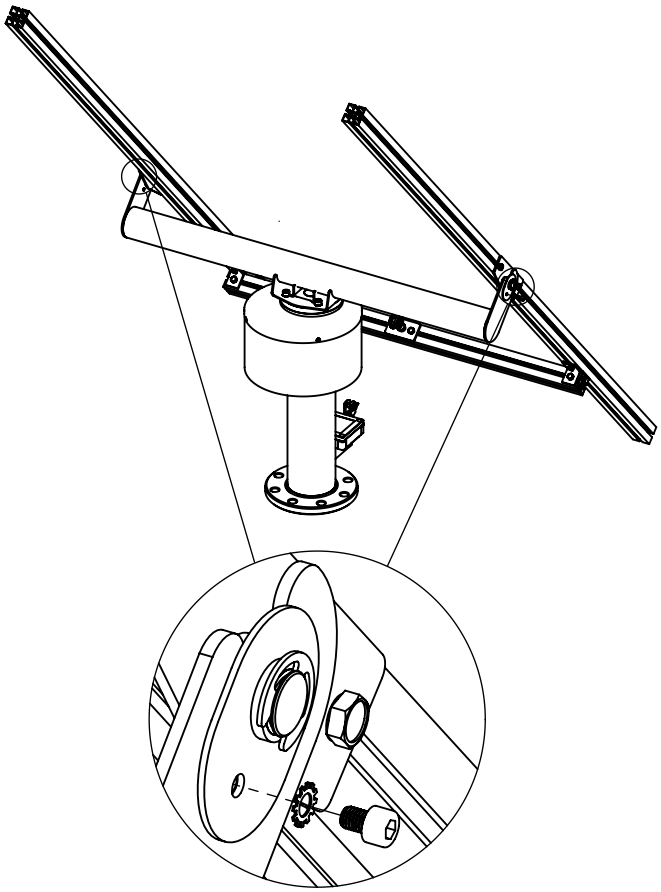

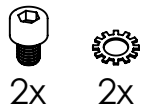

3

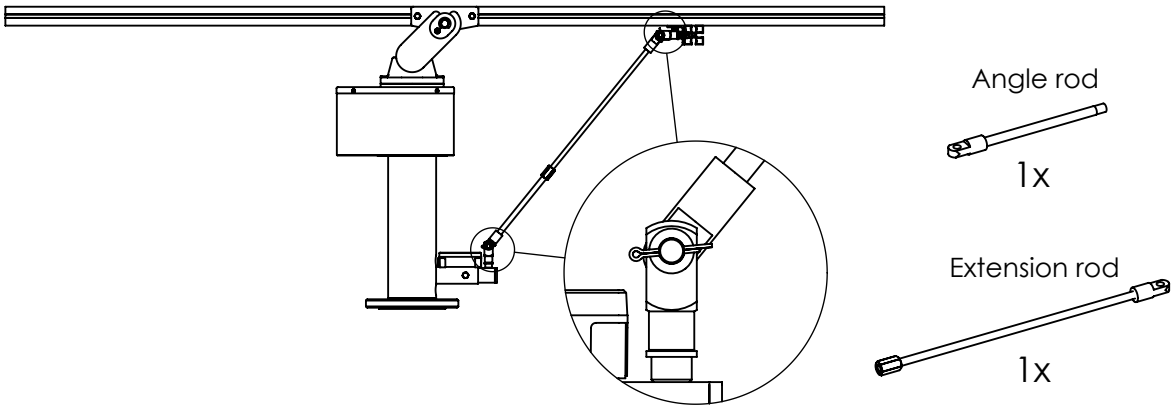

1. Combine the angle rod and the extension rod.
2. Make sure both fork joints are unscrewed half a turn.
3. Attach the rod ends to the fork joints.

PART V - PANELS

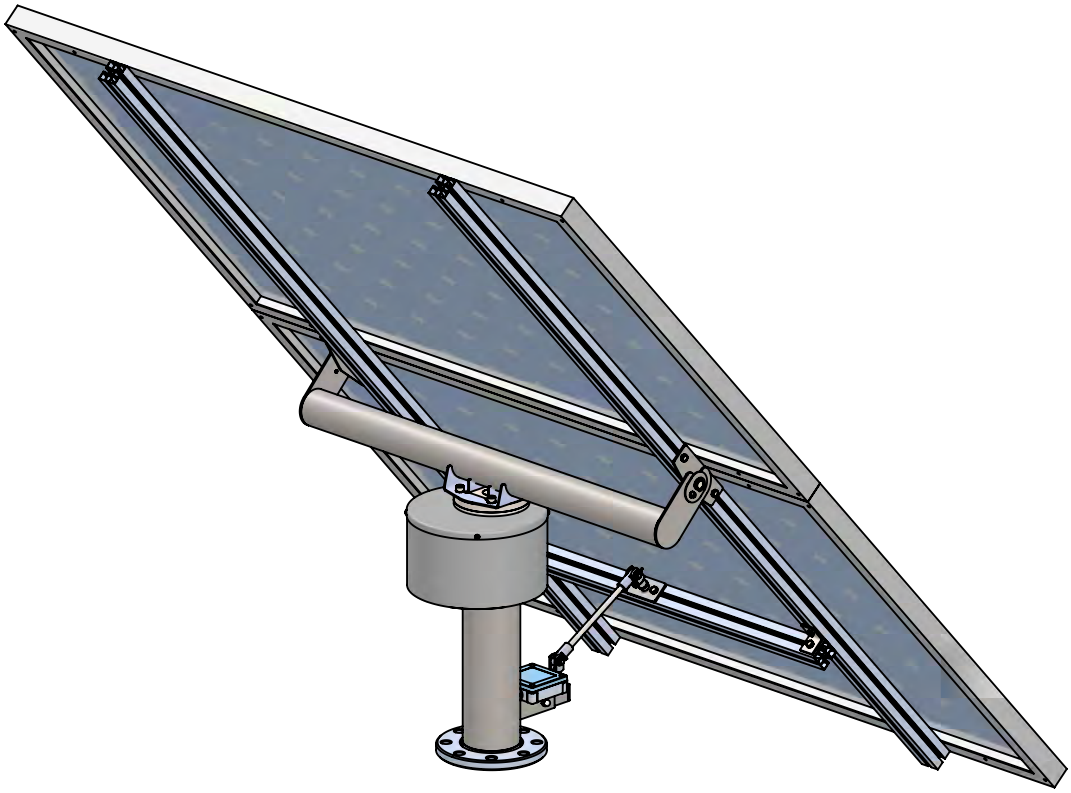

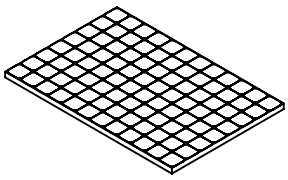

2x

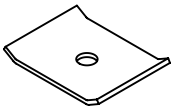

8x

M8

8x

M8x20

8x

8x

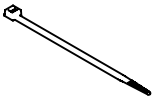

8x

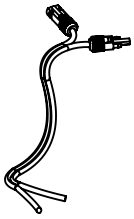

1x

1

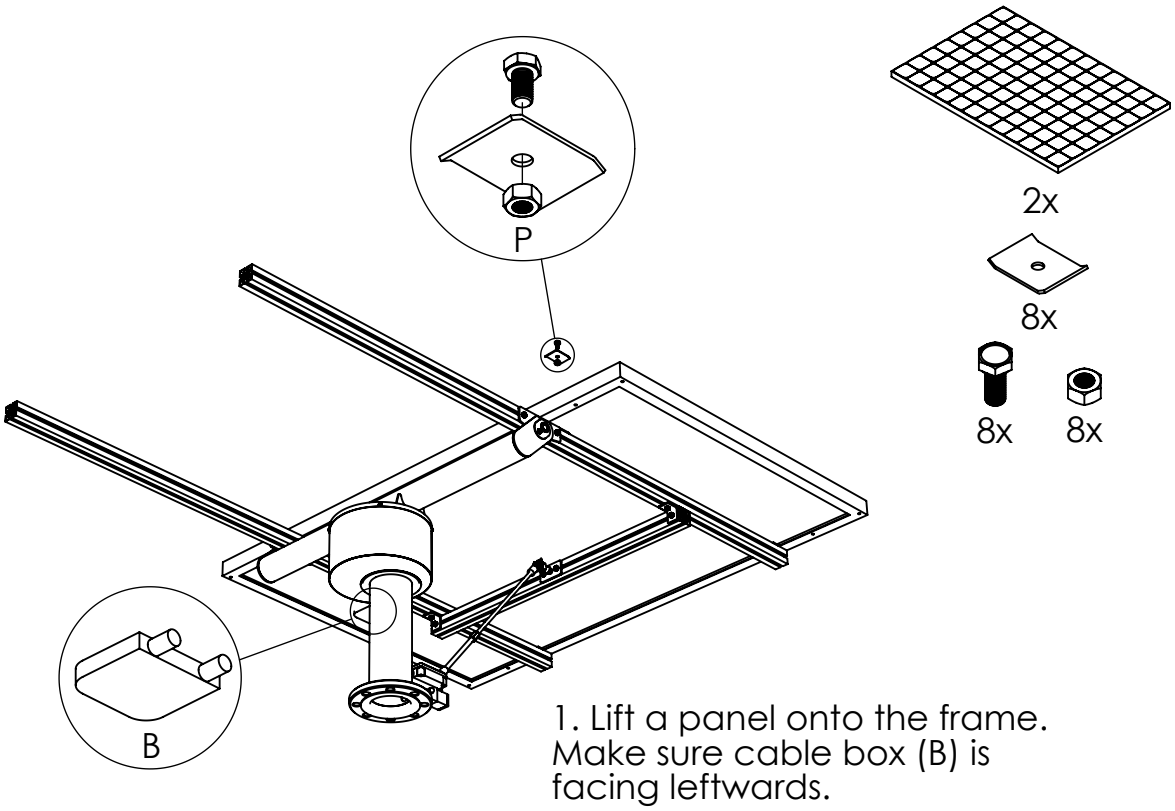

1. Lift a panel onto the frame. Make sure cable box (B) is facing leftwards.

2. Lock the panel into place with four panel clamps (P).

2

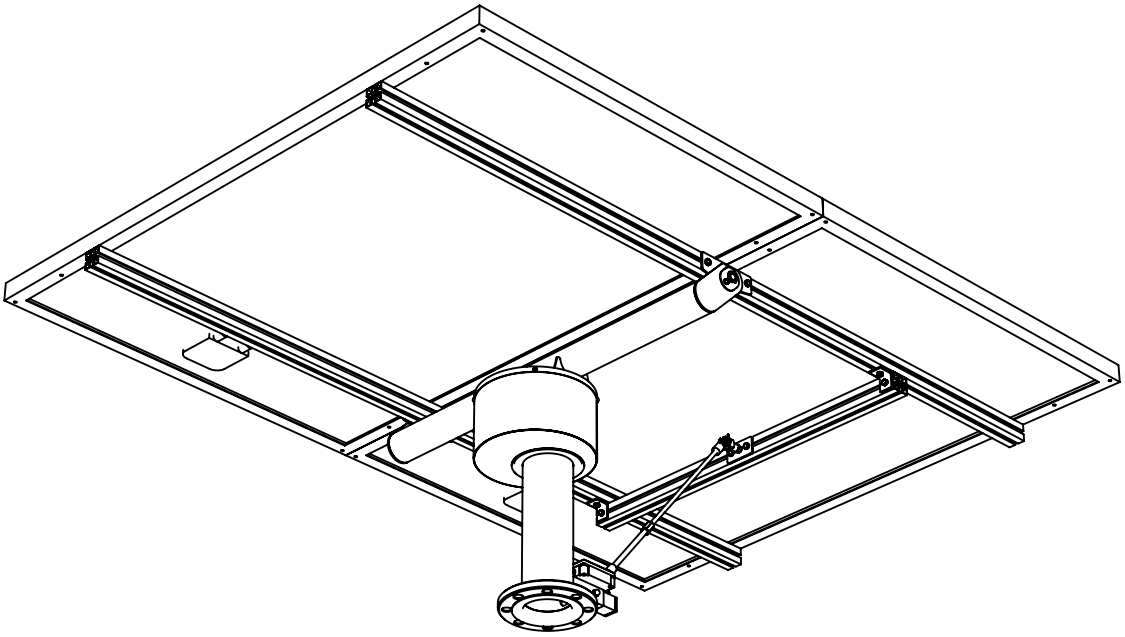

Repeat the same steps for the second panel.

3

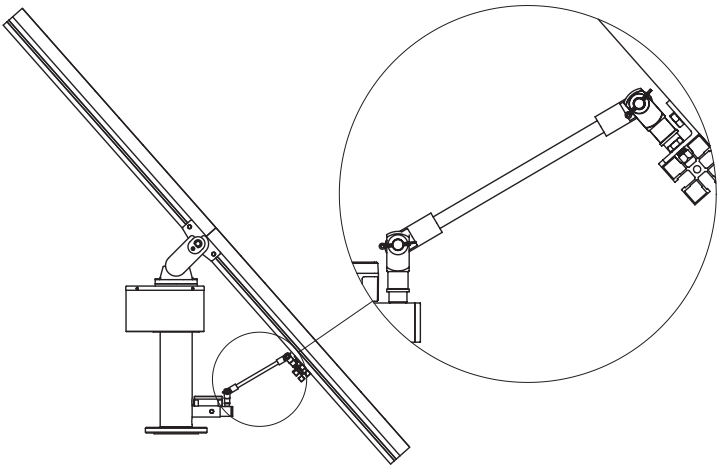

Remove the extension rod and attach the angle rod.

4

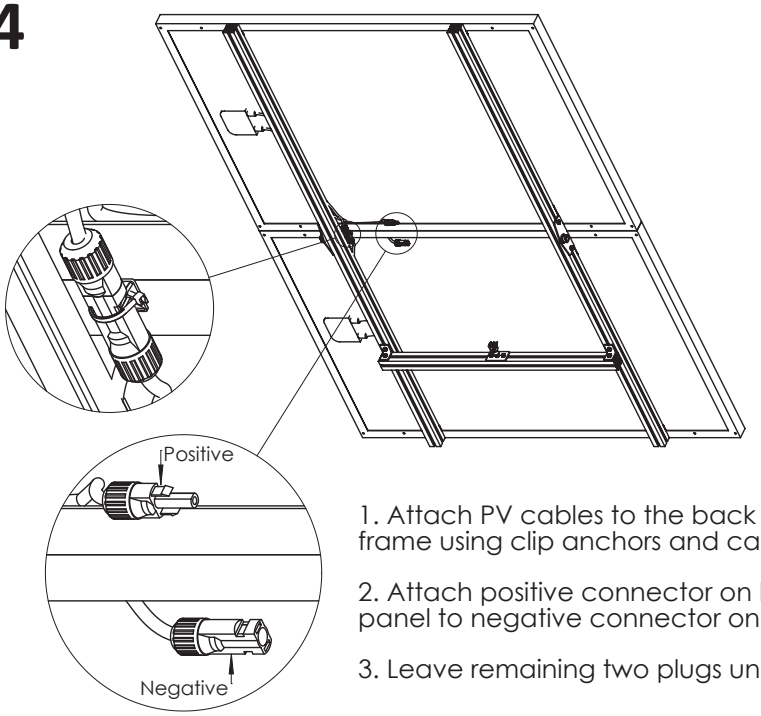

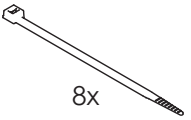

8x

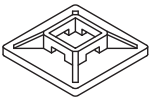

8x

1. Attach PV cables to the back of the frame using clip anchors and cable ties.

2. Attach positive connector on bottom panel to negative connector on top panel.

3. Leave remaining two plugs unconnected.

Grid-tied system - Part I

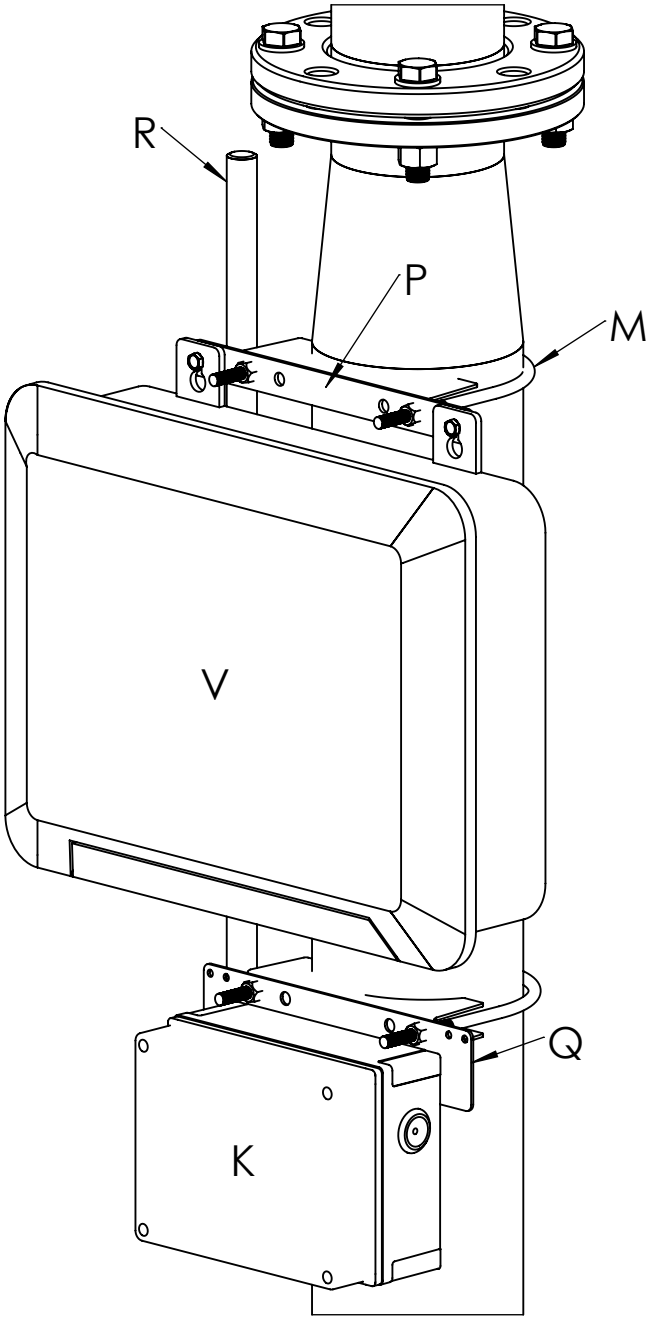

1. Use included U-bolt clamp (M) and support plate (P) to mount the inverter (V) at the top of the foundation column.

2. Mount the junction box (K) under the inverter using another included support plate (Q) and U-bolt clamp.

3. Attach the cable protection pipe (R) to the support plates using cable ties.

Grid-tied system - Part II

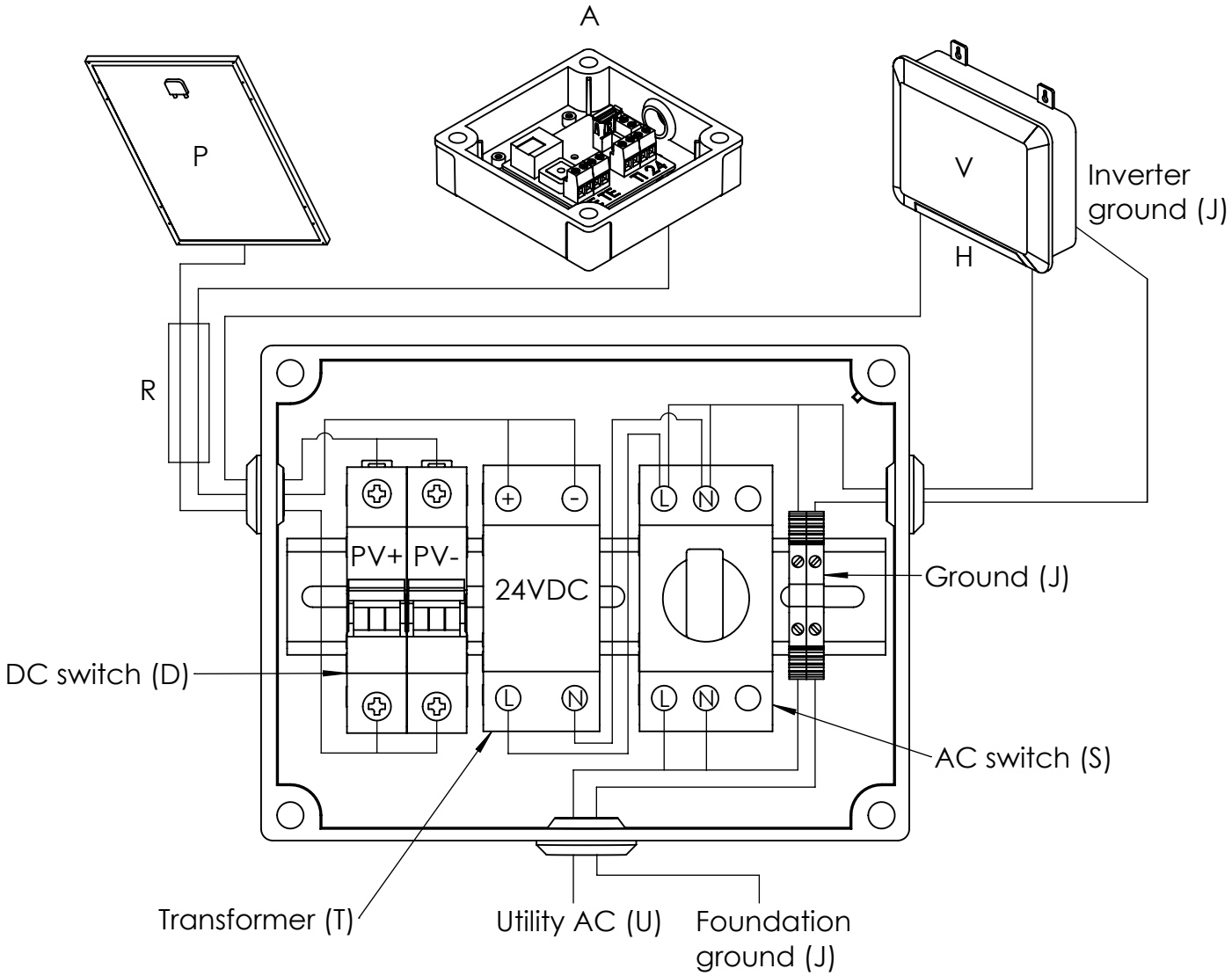

The PV solar panels (P) and utility AC (U) must be connected by a certified electrician. However, preparation work may be done by a layman as long as local code requirements are followed.

AC wires must be at least 1.5mm² thick and use an outdoor cable (such as MCMK). Be mindful of the AC labels and wire colors: Neutral (N) is blue, Phase (L) brown and ground (G) green-yellow.

1. Connect the 24V cable in the pipe (R) from the 24VDC transformer (T) to the ±24V terminal in the tracker's junction box (A). Then connect the AC side of the transformer (T) to the AC switch (S) as illustrated.

2. Locate the AC and PV connectors that come with the inverter.

3. Wire the PV cable in the pipe (R) to the inverter through the DC switch (D) in the connection box. Mount the PV connectors on the PV cable and then attach them to the inverter. The PV connector with a plus (+) sign is to be mounted on the red wire.

4. Mount the AC connector on an AC cable (MCMK 2x2.5+2.5mm²) that is to be wired to the inverter. Note that the cable must first be pulled through the protective cover (H). Connect the AC connector to the inverter's AC terminal and then fasten the protective cover.

Grid-tied system - Part III

5. Fill out and attach the included self adhesive warning labels. These labels need to be provided near the solar installation (on the inverter), the fuse box, and the utility meter, to indicate the presence of on-site generation and the placement of the DC switch (D) and the AC switch (S).

6. It is necessary to ground (J) the installation and inverter to prevent them from causing electrical shocks in case of damage. The installation needs to be grounded by connecting a 6mm² copper wire from one of the threaded rods at the foundation to the AC ground in the junction box. Likewise, the inverter has a ground point on its side.

7. Acquire a MCMK outdoor cable long enough to reach from the junction box (A) to the nearest fuse box inside the house. A 1-phase inverter needs a cable with two wires plus a surrounding shield (2x2.5+2.5mm²).

8. Wire the cable from the junction box to the fuse box. It is recommended to pull underground sections through a cable duct.

9. Make sure that cable sections above ground are properly attached. Sections coming out of the ground need to be protected by for example a U-profile made of metall.

10. Fasten loose cable sections using cable ties around the installation.

Contact a certified electrician and have them inspect the installation and carry out the remaining tasks.

1. Check that all cables are correctly wired in the junction boxes (A and K).

2. Connect the AC cable to the selected phase through a fuse in the fuse box.

3. Connect the PV cable connectors to the solar panels (P).

4. Turn on the AC switch (S) in the junction box (K) to power the inverter.

5. Turn on the fuse (F) to start the tracker. It takes a few minutes for the tracker to find a GPS signal before it start to rotate.

6. Turn on the DC switch (D) as well as the DC switch on the left side of the inverter to connect the solar panels.

7. Check the status lights on the inverter. Grid feed-in starts after about 30 seconds, which is indicated by a green light either shining or pulsating.

Off-grid system - Part I

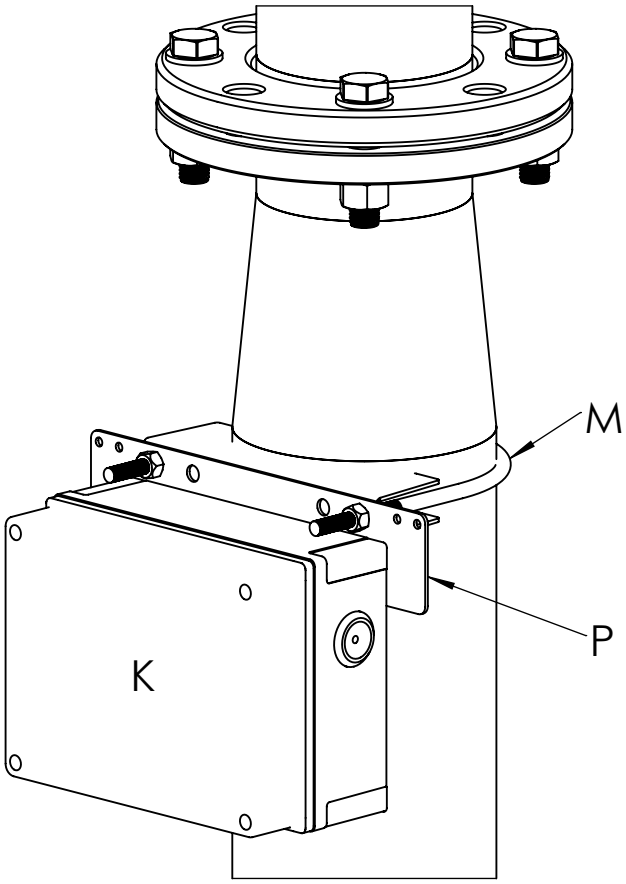

Use included U-bolt clamp (M) and support plate (P) to mount the junction box (K) at the top of the foundation column.

Off-grid system - Part II

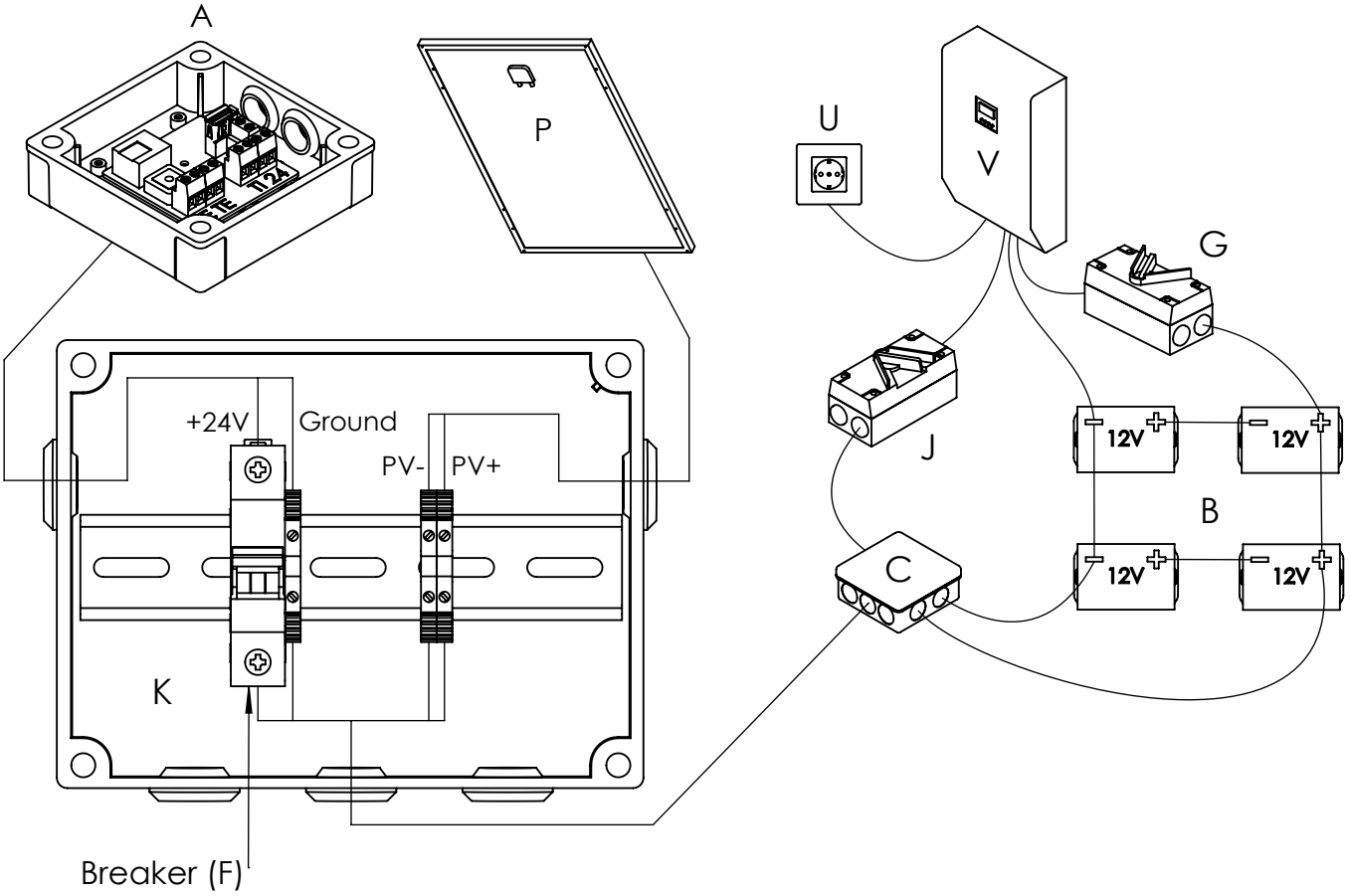

The PV solar panels (D) and any utility AC must be connected by a certified electrician. However, the preparation work may be done by a layman as long as local code requirements are followed. Please read the solar station's user manual for additional information on how to install and configure the station.

1. Mount the solar station (V) indoors on a wall where you want it, preferably at face level. Use a small screwdriver to remove the service panel at the bottom of the station to access its terminals.

2. Put up the PV disconnect switch (J) and the junction box (C) on the wall near the solar station. Then connect a suitable two-wire cable (2x2.5mm²) from the solar station's PV input terminals to the terminals in the junction box through the PV switch. Make sure the switch is turned off.

3. Connect the batteries (B) together to get the required voltage for the solar station. Be very careful to avoid short circuiting the batteries. Use a voltage meter to confirm you have wired the batteries correctly.

4. Put up the battery disconnect switch (G) on the wall and make sure it is switched off. Connect the positive terminal from the battery array to the solar station's positive battery input terminal through the battery switch and through a 200A fuse. Use the red 1x16mm² cable.

5. Wire the black 1x16mm² cable from the negative terminal on the battery array to the solar station's negative battery input terminal.

Off-grid system - Part III

6. Wire a cable with two conductors from the 24V terminal in junction box (A) to junction box (K). Connect the +24V wire to the breaker (F) and the ground wire to one of the screwterminals next to the breaker. Make sure the breaker is switched off.

7. Wire a MCMK outdoor cable with four conductors (4x2.5mm²) from the four terminals in junction box (K) to the terminals in junction box (C). It is recommended to pull underground sections through a cable duct. Make sure that cable sections above ground are properly attached. Sections coming out of the ground need to be protected by for example a U-profile made of metall.

8. Connect the included PV cable to the remaining two screw terminals in junction box (K). Do not connect the PV contacts to the solar panels yet.

9. Fasten loose cable sections using cable ties around the installation.

Contact a certified electrician and have them inspect the installation and carry out the remaining tasks.

1. Check that all wires are correctly installed in the indoor and outdoor junction boxes (A, K and C).

2. To power the solar tracker, wire a cable (2x2.5mm²) to the screw terminal in junction box (C) so that it connects to the 24V terminal in junction box (A). Join the 24V plus side to the terminal supplied with a fuse. After this has been done, connect the two wires directly to the battery's 24V plus and minus sides. Be careful not to short-circuit the battery's terminals.

3. Wire the AC output from the solar station to the fuse box to distribute power to outlets (U).

4. If the building has utility power then connect it to the AC input terminal at the solar station.

5. Connect the PV cable's connectors to the solar panels (P). Make sure that the polarity is correct at the PV switch (J) and from there to the solar station (V).

6. Reattach the service panel to the bottom of the solar station.

7. Switch on the breaker (F) in the junction box (K) to start the solar tracker. It takes a minute or two for the tracker to begin rotating.

8. Turn on the battery switch (G) to power on the solar station (V). The station will beep for a few seconds.

9. Turn on the PV switch (J) to enable solar charging.

10. Turn on the solar station's inverter using the switch found at the bottom right or right side of the device.

11. Confirm that wall outlets (U) connected to the solar station are powered.

Off-grid system - Part IV

The solar station can be configured using the buttons below the display. To access the settings hold the enter button on the right side of the display for a few seconds. Recommended settings are listed in the table below. Please refer to the solar station's manual for more information.

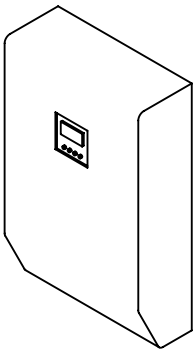

Number	Description	Setting
01	Output source priority	SbU (solar or battery)
02	Maximum charging current	60A
03	AC input voltage range	APL
04	Power saving mode	SdS (disabled)
05	Battery type	Gel
06	Auto restart on overload	LtE (enabled)
07	Auto restart on high temperature	TtE (enabled)
12	Voltage point back to utility	22V
13	Voltage point back to battery	FUL (full charge)
16	Charge source priority	OSO (only solar)
18	Alarm control	bOF (alarm off)
19	Auto return to default screen	EPS (yes)
20	Backlight control	LON (on)
22	Beep when primary source interrupted	AOF (off)
23	Overload bypass	byE (enabled)
26	Bulk charging voltage	29.2V
27	Float charging voltage	27.0V
29	Low DC cut-off voltage	21.0V

Keep in mind that batteries must not be left completely discharged for any longer period of time as it reduces their capacity and lifespan. If the winter season has little or no sunshine care must be taken to prevent the batteries from being drained in one of the following ways:

1. If utilty or generator power is available, setting 16 (charging priority) of the solar station can be switched from OSO (charge only from the sun) to CSO (charge from the sun if available, otherwise from utlity/generator).

2. If the system is not used during winter the batteries should be left fully charged and completely disconnected from all loads.